NEPTUNESEAL BAR-CODE

pat. pending

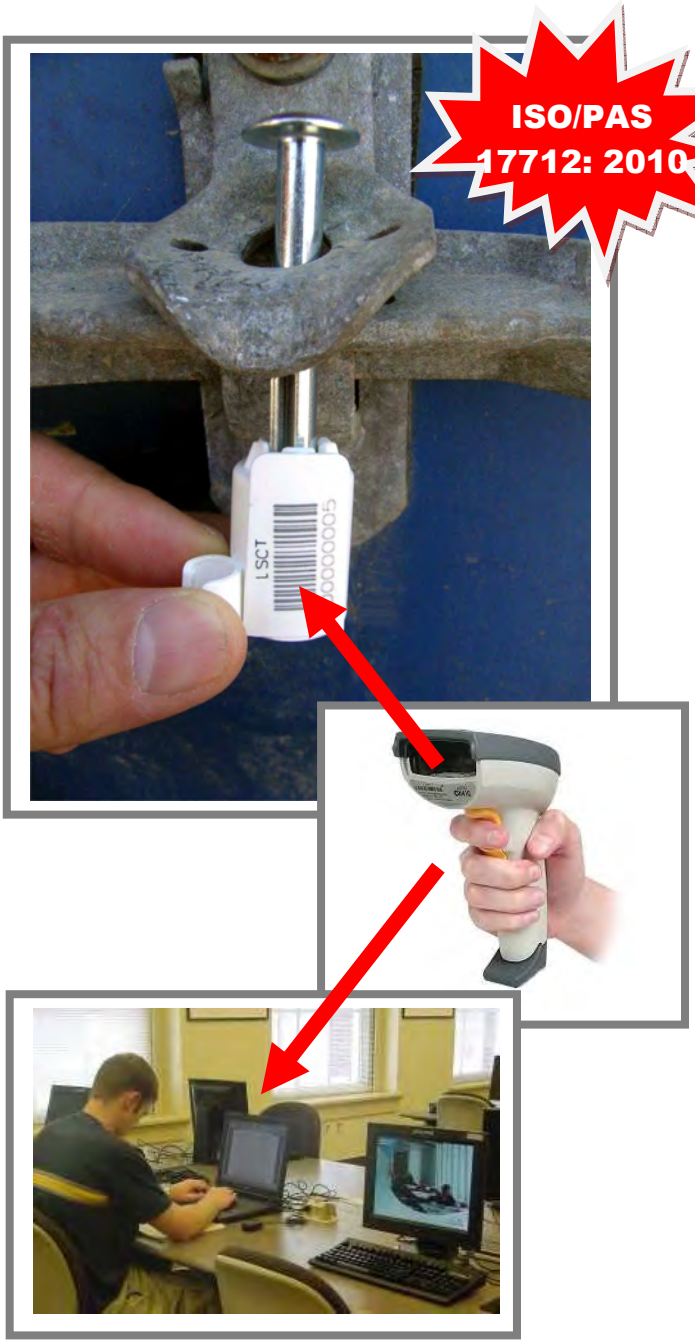

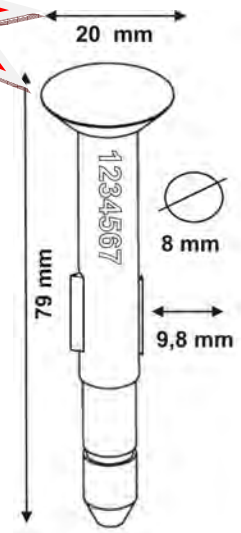

DESCRIPTION:

° **NEPTUNESEAL** is the first bolt type seal of its kind **ISO\PAS17712: 2010 *approved,*** with the internal metal part exceeding 18 mm .

Our innovative (pat. pending) design is characterised by two metal tabs attached to the bolt, which slot securely into the closure canal of the "female" part of the seal.

This amendment to the traditional bolt seal design, requested by the new ISO norms, means it is no longer possible to tamper the "female" part of the seal by spinning it at high speed.

Any Tampering attempt will damage the seal leaving it irreparable.

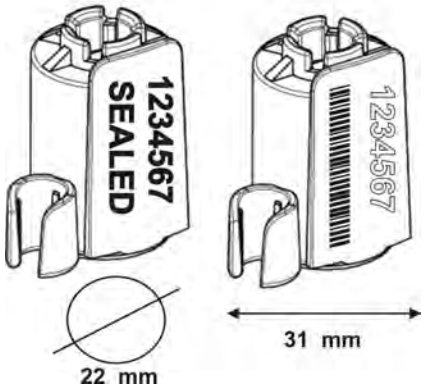

NUMBERING AND CUSTOMISATION:

°LASER printing
°Sequential numbering up to 15 figures
°Bar-code option
Data Matrix option
°RFID option
°Customisation up to 20 characters on one line
°Client logo on request
°For substantial orders it's possible to recreate company logo in relief

MATERIAL:

°Plastic parts: polystyrene / ABS in accordance with **: Restriction of Hazardous Substances (RoHS) listed in the European Directive 2002/EC.**

CERTIFICATES:

Compliant with ISO/PAS 17712:2010 HSS (high security seal)
ISO/PAS 17025 LAB APPROVED

AVAILABLE COLOURS

PACKING:
250 seals per carton
Carton Dimensions : 39x19x16cm
Carton weight: 13,3 kg

Office Bitola:
+389 (0) 47 203330

Electrolux Macedonia
www.electrolux.mk
electrolux@t-home.mk

Office Skopje:
+389 (0) 2 3298130